TYK+ 20

Performance Lighting





Long-lasting energy-efficient flood and accent light series for lighting landscapes, trees, columns, monuments, and architectural details.

- ¬ Multi-step powder-coat painting process, optimized against UV rays and corrosion.
- ¬ Copper-free precision die-cast aluminum housing, and adjustable stainless steel mounting bracket.
- ¬ Stainless steel graduated ferrules for aiming purposes on both sides of the fixture.
- ¬ Extra-clear, tempered, silk-screened, flat glass diffuser.
- ¬ Custom molded, anti-aging gasket(s).
- ¬ Stainless steel external hardware.
- ¬ Custom MCPCB utilized to maximize heat dissipation and promote long LED life.
- ¬ NEMA 2H X 2V light distribution (C/I)
- ¬ NEMA 4H X 4V light distribution (C/M)
- ¬ NEMA 5H X 5V light distribution (C/IW)
- ¬ NEMA 5H X 5V light distribution (ELL).
- ¬ High-transmittance transparent optics.
- ¬ Input voltage: 120-277 V (50 / 60 Hz), integral 0-10 V dimming driver.
- ¬ Standard tear-proof nickelled brass cable gland M20x1.5 for cables Ø0,4" - Ø0,55".
- ¬ Consult factory for dimming options, marine-grade, custom finishes (please specify RAL color), and non-cataloged CCT (Kelvin) options including static colors.
- ¬ Consult factory for additional optic options.
- ¬ 5-year warranty.
- ¬ Marine grade finish.
- ¬ Suitable for Natatorium applications.

IP 66 | WET | c UL us LISTED | 0-10 V | RAL | IK 07 4 J | FULL CUT OFF

FINISHES

- AN-96 / Iron gray / Textured
- BK-81 / Black / Textured
- GR-94 / Aluminum metallic / Textured
- WH-87 / White / Textured
- RB-10 / Iron rust / Textured

TYK+ 20

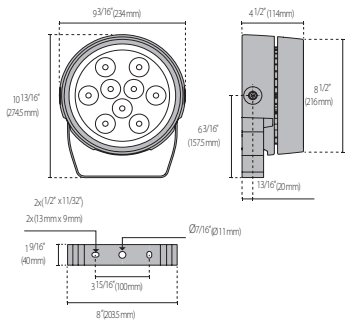

EPA: 0.5 ft²
Fixture weight: 11 lbs

Lumen Output	3K	4K
TYK+20 C/H 20W	1711	1847
TYK+20 C/H 35W	2935	3160
TYK+20 C/H 50W	3916	4227
TYK+20 C/W 20W	1858	2006
TYK+20 C/W 35W	3078	3323
TYK+20 C/W 50W	4282	4590
TYK+20 C/M 20W	1913	2065
TYK+20 C/M 35W	3169	3421
TYK+20 C/M 50W	4377	4725
TYK+20 35° × 65° 20W	1255	1354
TYK+20 35° × 65° 35W	1933	2087
TYK+20 35° × 65° 50W	2691	2905

Scan here for installation instructions

Performance in Lighting reserves the rights to make all necessary changes without prior notice.
Performance in Lighting - 2621 Keys Pointe - Conyers, Georgia 30013 - USA - voice 770.822.2115 - info.usa@pil.lighting
www.performanceinlighting.com

Rev. 07/21/2026

Order Guide - TYK+ 20

Performance Lighting

Order code example **TYK+20-20-3K-C/I-AM-UNV-010V-AGS**

Series	Wattage	CCT	Distribution	Finish	Voltage	Dimming	Options/ Accessories
TYK+20 TYK+20	**20** 20 Watt **35** 35 Watt **50** 50 Watt (max) **X** Specific wattage must be below max	**27K** 2700K **3K** 3000K **35K** 3500K **4K** 4000K **RGBW4*** RGBW 37W only C/M only 4K white **RGBW27*** RGBW 37W only C/M only 27K white ** Consult factory for control details and MOQ*	**C/I** 10° Beam **C/IW** 65° Beam **C/M** 34° Beam **ELL** 35° x 65° Beam	**AM** Aluminum Metallic **IG** Iron Gray **IR** Iron Rust **WH** Textured White **BK** Textured Black **CC** Custom Color	**UNV** 120-277V	**010V** 0-10V Dimming (Remote Driver Only **ELV** 120V Line-Voltage Dimming Driver ** Consult factory for further options*	**AGS** Anti-Glare snoot **ERB** Extra rotation bracket **JBOX** Jbox cover plate **BD** Barn door kit (Not suitable with Snoot) **2AB** Two axis rotation bracket for gliding support **GC** Gliding support (3 9/16* poles) **P8** 8' pole Ø 3.5" **P10** 10' pole Ø 3.5" **P12** 12' pole Ø 3.5" **P14** 14' pole Ø 3.5" **P16** 16' pole Ø 3.5" **PXX** Specify pole height **XX'Cable** Specify length of factory installed cable 3' standard **GRNSPI** Ground Spike

*80 CRI STANDARD - OTHER OPTIONS AVAILABLE

Performance in Lighting reserves the rights to make all necessary changes without prior notice.
Performance in Lighting - 2621 Keys Pointe - Conyers, Georgia 30013 - USA - voice 770.822.2115 - info.usa@pil.lighting
www.performanceinlighting.com

OPTIONAL ACCESSORIES

DESCRIPTION	FINISH	PART NUMBER
Optical accessories		
Anti-glare snoot	●	**3107466**
Kit barndoor	●	**3112970**
Wall mount		
JBox cover plate - Iron gray	●	**07959**
Surface mount		
Extra rotation bracket +55°/-90°	●	**3108557**
Pole mount		
Two-axis rotation bracket for gliding support	●	**3107473**
Gliding support made of painted aluminium for the installation on Ø 3 9/16" / Ø 90 mm	●	**14099696**
Pole 8' Ø 3.5"	●	**71408353**
Pole 10' Ø 3.5"	●	**71410353**
Pole 12' Ø 3.5"	●	**71412353**
Pole 14' Ø 3.5"	●	**71414353**
Pole 16' Ø 3.5"	●	**71416353**
Ground mount		
Ground Spike		**700191**



3107466

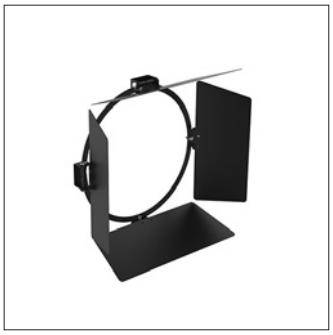

3112970



07959



3108557

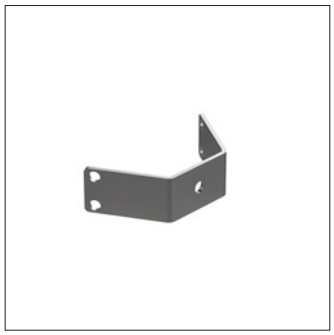

3107473



14099696

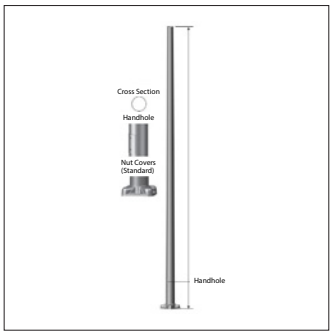

71408353
71410353
71412353
71414353
71416353

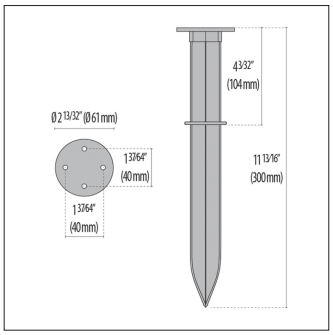

700191

Order Guide - Poles for TYK+

Performance Lighting

Order code example	714-20-35-3

Note: When ordering, please specify quantity of fixture per pole as well as installation location (city & state)

Material	Height (ft)	Pole Diameter (in)	Custom Options *(Blank is Standard)*	Finish (additional characters may follow for factory information)
714 Aluminum* **715** Steel* **716** Wood* ***Based on EPA and wind loads, pole may need to be tapered or require a tenon.**	**08** 8' tall **10** 10' tall **12** 12' tall **14** 14' tall **20** 20' tall **40** 40' tall Custom heights available, contact factory for details	**35** Ø3.5"	**DBx** Direct Burial** (x = depth below grade, measured in feet) **GFCI** integrated GFCI outlet** **BA** Banner Arms** (contact factory for details) **some options not available with wood poles – contact factory for details.	**1** Aluminum Metallic **2** Black **3** Iron Gray **4** Iron Rust **5** White **6** Custom Color (specify RAL#) **W1** Wood – Caramel – smooth **W12** Wood – Vanilla - brushed *For more, see below*

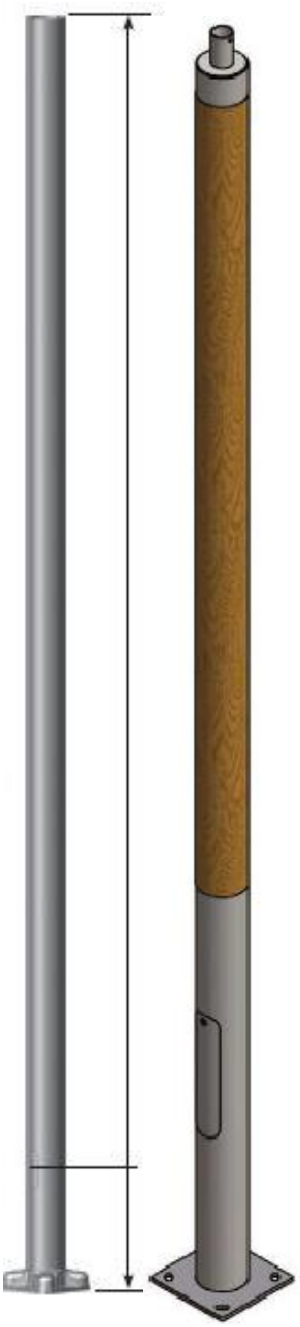

Note: When ordering, please specify quantity of fixture per pole as well as installation location (city & state)

WOOD GRAIN FINISH OPTIONS:



Note: Base cover shape and bolt circle diameter (BCD) will vary based on pole size and vendor. Contact factory for details related to your project.

Performance in Lighting - 2621 Keys Pointe - Conyers, Georgia 30013 - USA - voice 770.822.2115 - info.usa@pil.lighting
www.performanceinlighting.com

RGBW ACCESSORIES

DESCRIPTION	FINISH PART NUMBER
Controls	
Kit driver 48V	**17433**
Kit driver 48V Wet Location	**17096**

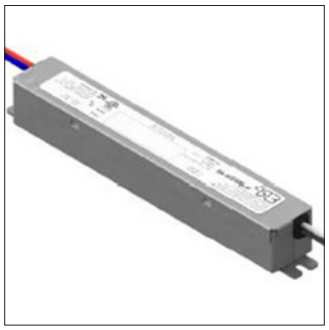



Product is supplied with integral DMX controllers, and remot 48VDC power supply. Controls by others.